Welcome to Byte robot Tech Store

We are a leading enterprise in the robot industry, focusing on technology, technical skills, education, and educational development. Our range of programmable intelligent products includes robots, robot eyes, robot hands, robotic arms, smart cars, hovercrafts, claws, industrial products, and more. These products not only provide learning opportunities for children and engineers but also ignite their interest in education. We are soon launching more new products in technology, education, and health, suitable for children's entertainment and adult learning. When you purchase our programming products, we will also provide relevant technical documents to assist you in learning and using the products more effectively.

By the way, if you like our store, Please add our store to your Favorite Stores, You can get our New arrival and Discount inform

Title: R1 series balanced car chassis two-wheel frame Intelligent car chassis metal integrated encoder motor

Shipping list (default shipment)

If you buy a transparent acrylic and add one layer, the extended black acrylic will be changed to the extended transparent acrylic
MG310 Hall encoder gear motor X2
48mm rubber tyre X2
U-chassis bracket X1
Expand black acrylic sheet X1
Screws, nuts and washers
XH2.54 20cm 6P double-ended wire X2
XH2.5420cm 6P single-head wire X2
XH2.54 Bend socket X2
XH2.54 Straight socket X2

Additional purchase of black acrylic sheet(2 layer kit):
3mm black acrylic sheet X1
M3*40 double pass copper column X4
M3*8 screws X8

Purchase TB6612 dual drive with voltage regulation version
(This module is not welded by default)
TB6612 module with voltage regulator X1
M3*10 double pass copper column X4
M3*6 screws X8

Note:

1.This is unassembled, you need to assemble it, we provide installation tutorials for free, Please leave your email address

2.Due to the customs policy, the product is mailed without a battery, and 12V lithium battery is recommended

- 3D model
- 1. Trolley chassis assembly video tutorial.mp4
- Balance trolley chassis installation operation.pdf
- How to install tires and reduce runout.mp4
- TB6612_driver board_Optional purchased.zip

Provide 3D ,Video Installation Guide and so on.

Byte robot

R1 series balance car chassis

Standard self-developed high-quality rubber tires, motor built-in encoder, provide video tutorials

Hall encoder	DC gear motor	Self-developed high-quality rubber tires
One-piece frame	MiNi volume	Provide video tutorials

Comparison of advantages

Products	WHEELTEC Balancing Trolley	Youshang Balance Trolley
Control algorithm	PID/LOR	PID
Mathematical modeling	Provide detailed mathematical models	None
STM32 low-level learning	Provides routines based on all modules andSTM32 Basic Tutorial	Basically no
Program Version	Registers/Standard Library/hal library	Single version
Attitude algorithm	Kalman filter/complementary filter/DMP	Single version
Tutorial	Full range of motor/balance trolley principle, Code-level video tutorials, a full set of development manuals	Operation and use of the main tutorial

Byte robot

01

One-piece metal chassis

Integrated molding processing, can better ensure the balance of the car coaxial, to ensure that the balance of performance

02

Standard high quality MG310 motor

The motor is small but the power volume is relatively high, using the traditional Hall encoder, high stability

Parameter Description

Encoder Type: Hall (Magnetic induction)	Reduction ratio: 1:20	Rated voltage: 7.4V
Rated torque: 0.4kgf.cm	Rated current: ≤500mA	Rated speed: 400±13% RPM
Stall-Rotor Torque: 1.5 ± kgf.cm	Stall current: ≤2mA	

03

Optional acrylic height plate

Acrylic base plate can be purchased to expand the space of the car, and matching copper post screw nut accessories can be given.

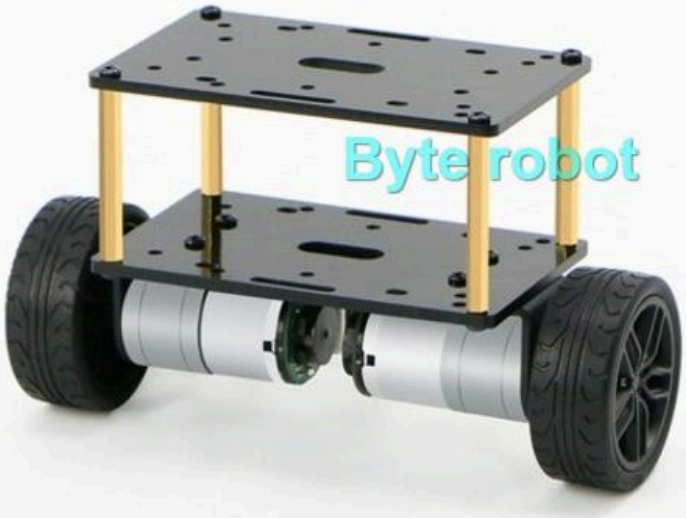

Black acrylic sheet

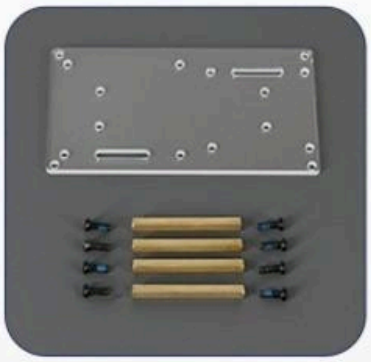

Transparent acrylic sheet

Self-developed 48mm high quality rubber tire

The overall aesthetics of the new tyre are better, with the tread redesigned for improved anti-slip and wear resistance. The high-strength wheel hub has been redesigned to prevent cracking under heavy loads. The soft rubber tyre has a flat tread, providing moderate friction with the ground, suitable for both differential and four-wheel drive steering.

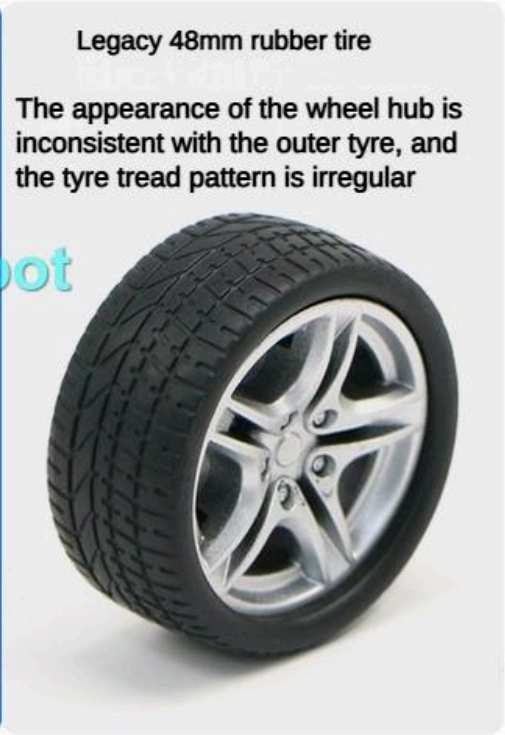

Byte robot

05

Hole shaft with higher precision

Install the tire through a well-designed high-precision interference fit, the hole and shaft fit accuracy is higher, there is no need to worry about the problem of wheels falling during use, and the tire can be quickly fixed without a coupling

06

Wheel hub and tire fit better

The redesign of the wheel hub and tire fit can effectively reduce the slippage of the wheel hub and tire,Avoid falling off the tire and wheel hub, even if there is a large load can be easily.

07

Optional multiple protection motor drive module

With voltage regulator circuit, no logic power supply

Built-in power supply interface voltage detection circuit, which can collect power supply voltage through MCU ADC

Provide multi-channel 5V5A power supply interface with protection

Provide multi-channel 3.3V0.5A power supply interface with protection

Compatible with common motor XH2.546P interface with encoder

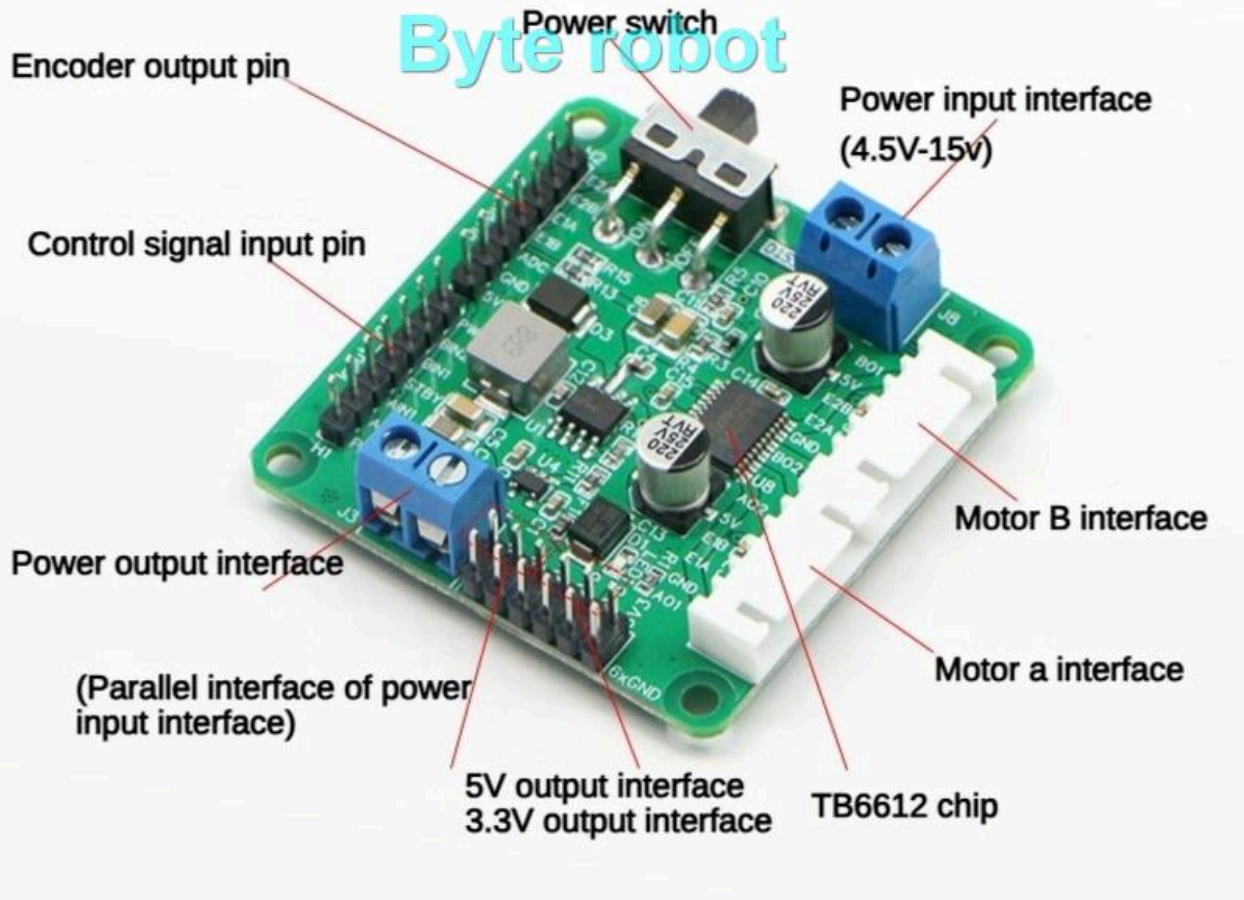

10

Advantages over Polymer batteries

The 18650 battery has a built-in explosion-proof valve. When the pressure is large, the explosion-proof valve protrudes, and the top fuse releases the pressure. When the pressure of the polymer battery is large, it will continue to expand and bulge, and the continuous expansion has the risk of rupture and explosion. The number of cycles of charge and discharge of 18650 battery is more than 800 times and the attenuation is 20%, and the theoretical service life can be used for more than 3 years.

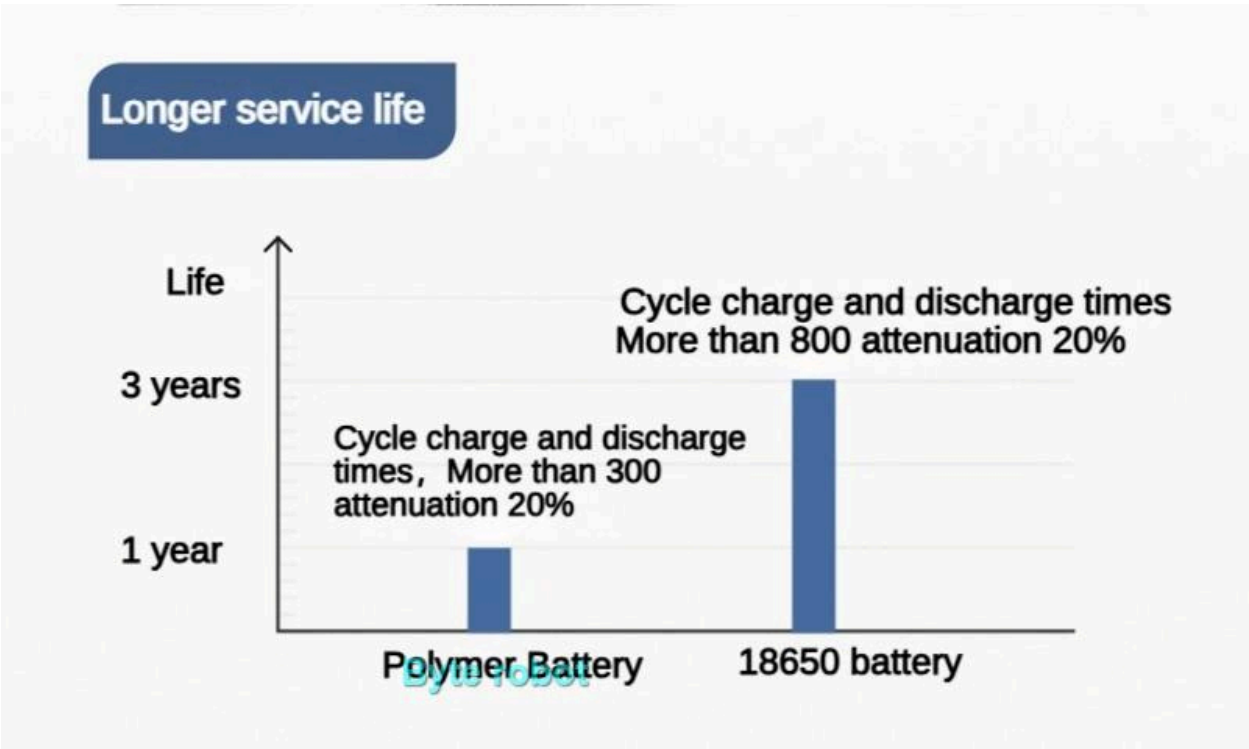
Longer service life
Life
3 years
1 year
Cycle charge and discharge times
More than 800 attenuation 20%
Cycle charge and discharge
times, More than 300
attenuation 20%
Polymer Battery
18650 battery

Shipping List (Default bulk shipment)

If you buy a transparent acrylic plus a layer, expand the black acrylic plate will be changed to expand the transparent acrylic plate.

MG310 Hall encoder geared motor X2

48mm rubber tyres X2

U-shaped chassis bracket X1

Expand black acrylic sheet X1

Several screws, nuts and washers

PH2.0 to XH2.54 double-headed line 20cmX2

PH2.0 single-head line 20cmX2

XH2.54 Bent socket X2

XH2.54 straight socket X2

Byte robot

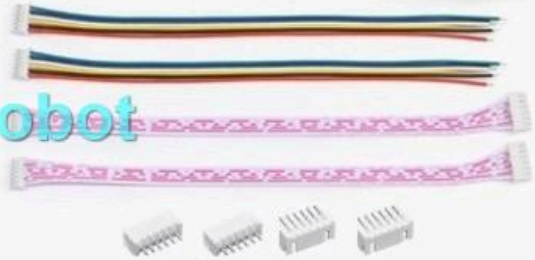

Plus the purchase of black acrylic board:

3mm black acrylic sheet X1

M3 * 40 double-pass copper column X4

M3 * 8 screw X8

Complimentary installation tools

Buy the chassis for loose parts delivery, and give away Phillips screwdriver and Phillips sleeve by default

Byte robot

Motor Encoder Wiring Instructions

MG310 Hall encoder section

1: Motor line-
2: Encoder power supply
3: encoder output Phase A
4: encoder output phase B
5: Encoder ground wire
6: Motor line +

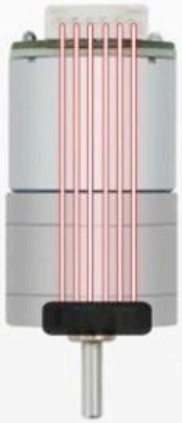

Byte robot

Drawing Presentation

Unit: mm

Balancing trolley chassis drawings

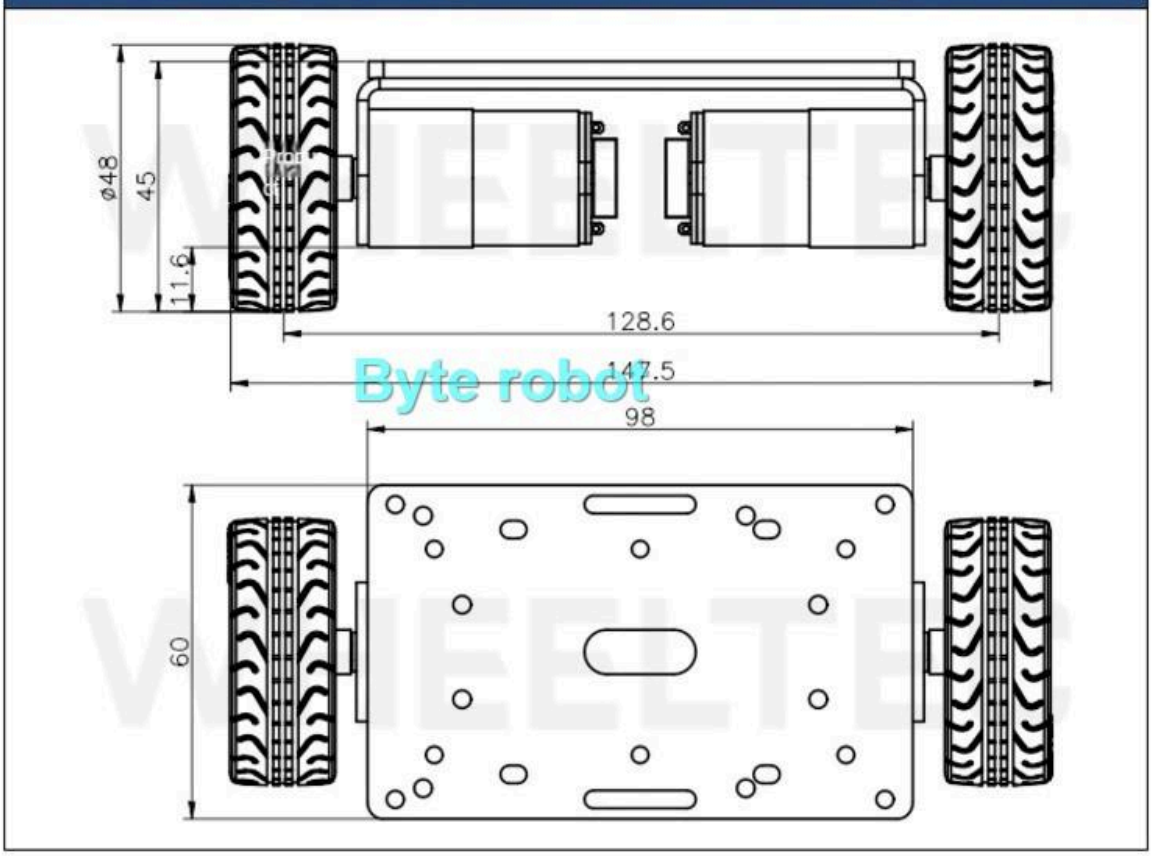

Byte robot

Black acrylic sheet Blueprint

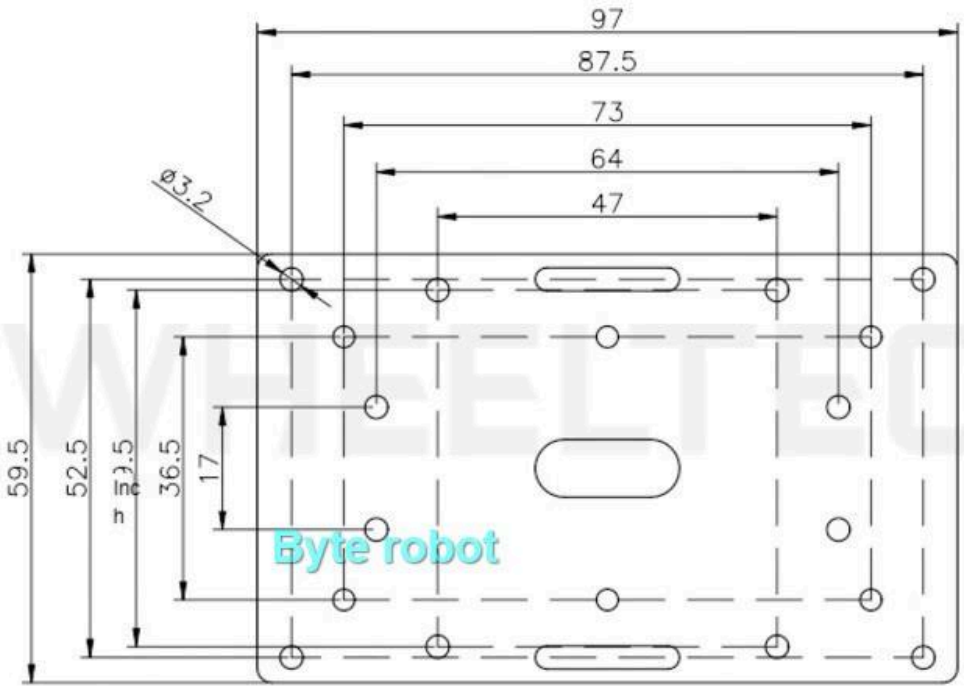

WHEELTEC
Byte robot

Transparent acrylic sheet Blueprint

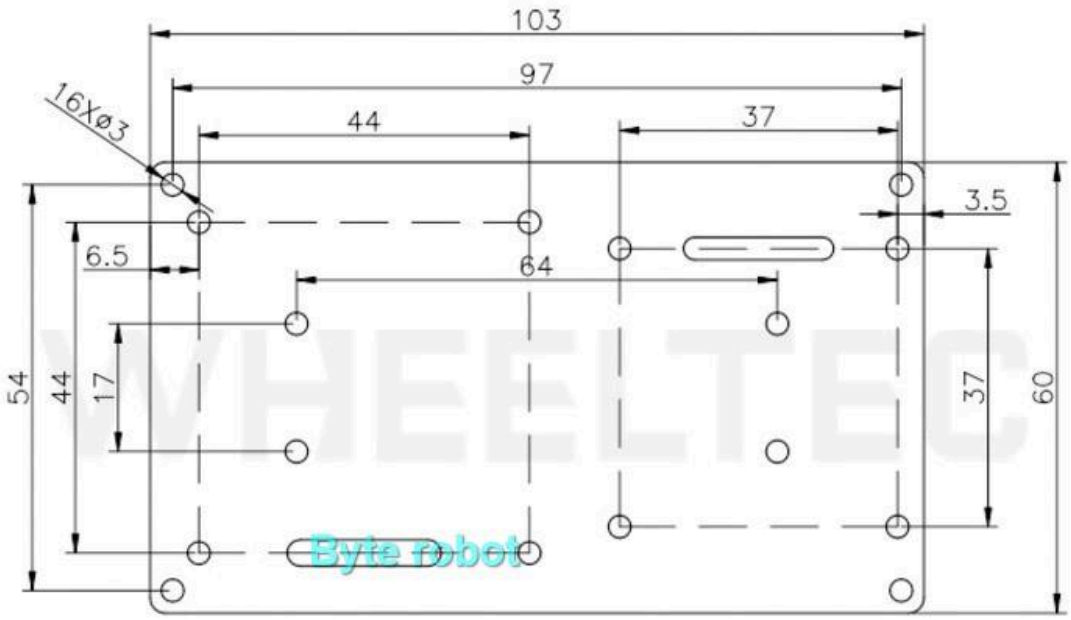

MG310 DC Gear Motor Drawing

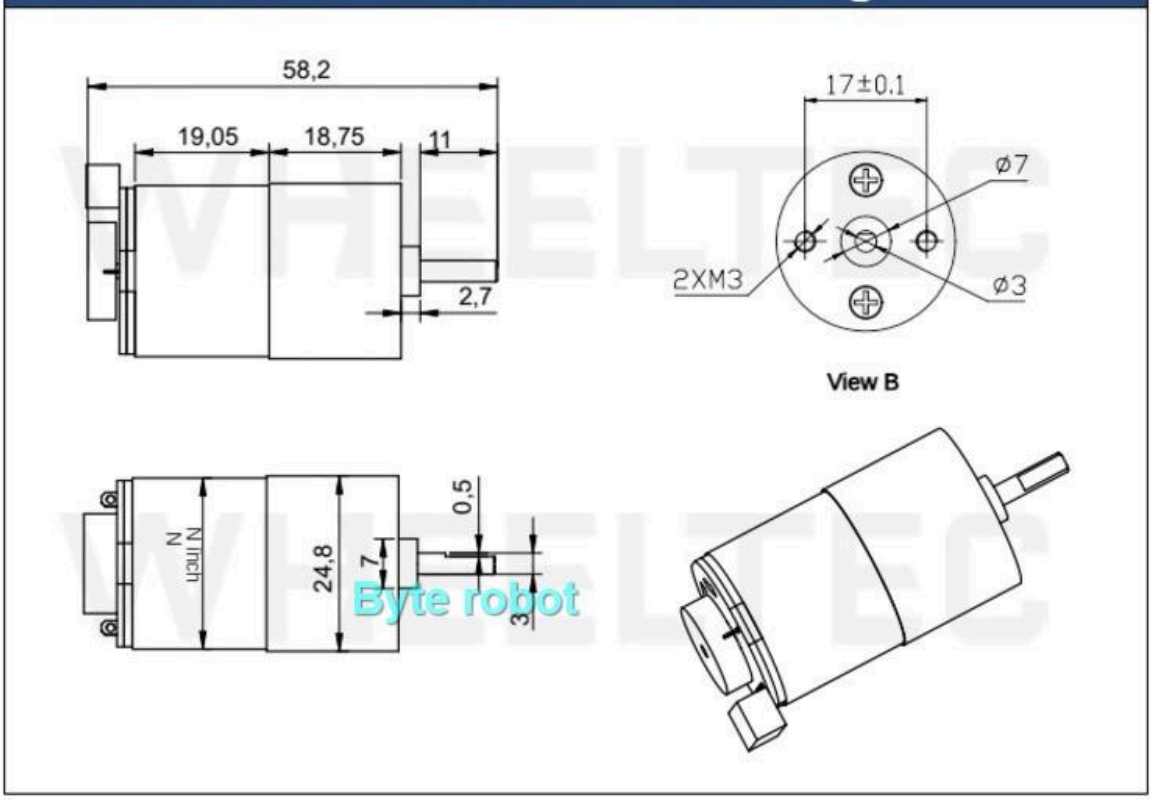

U-shaped chassis bracket drawing

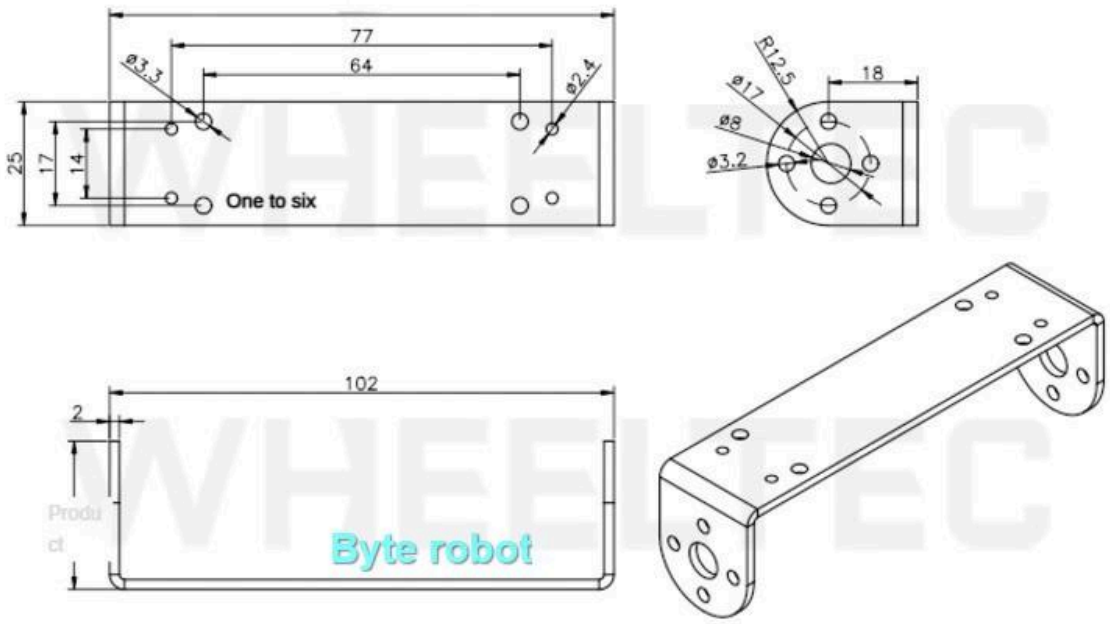

48mm Rubber Tire Blueprint

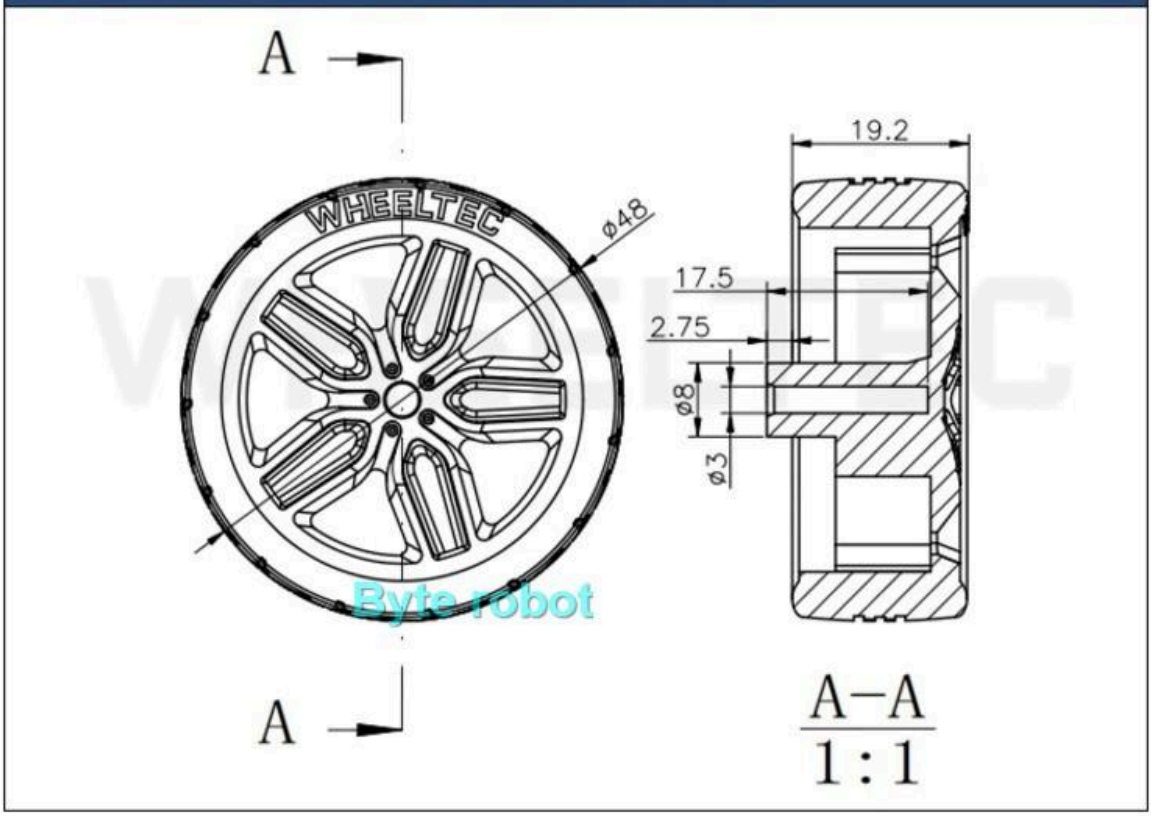

Byte robot
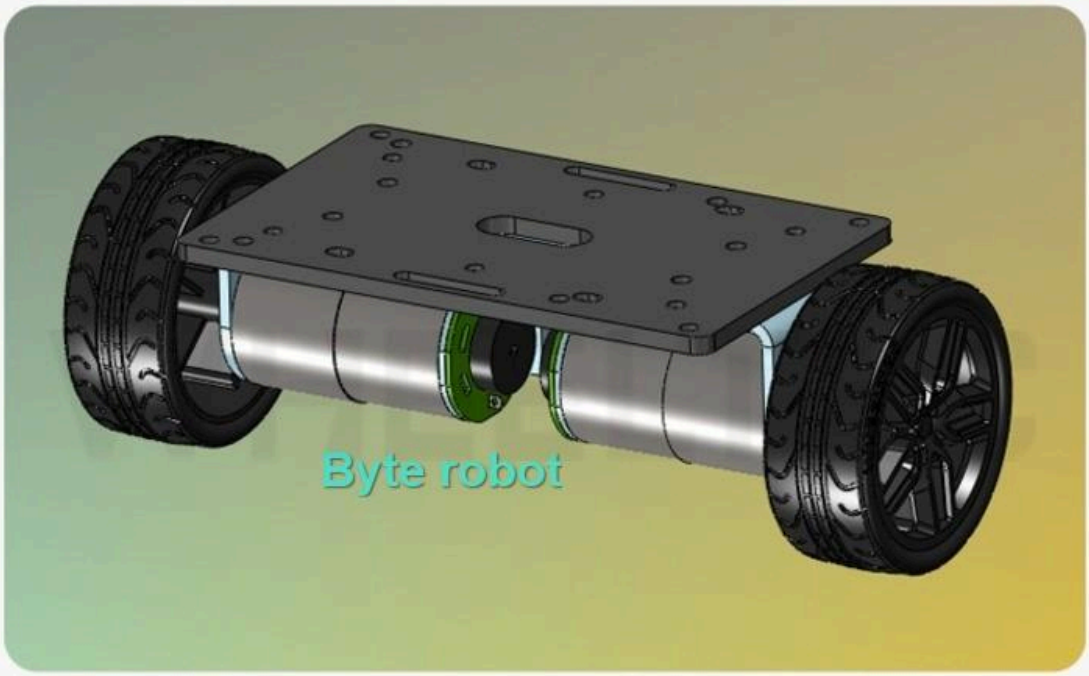
Provide 3D model diagram